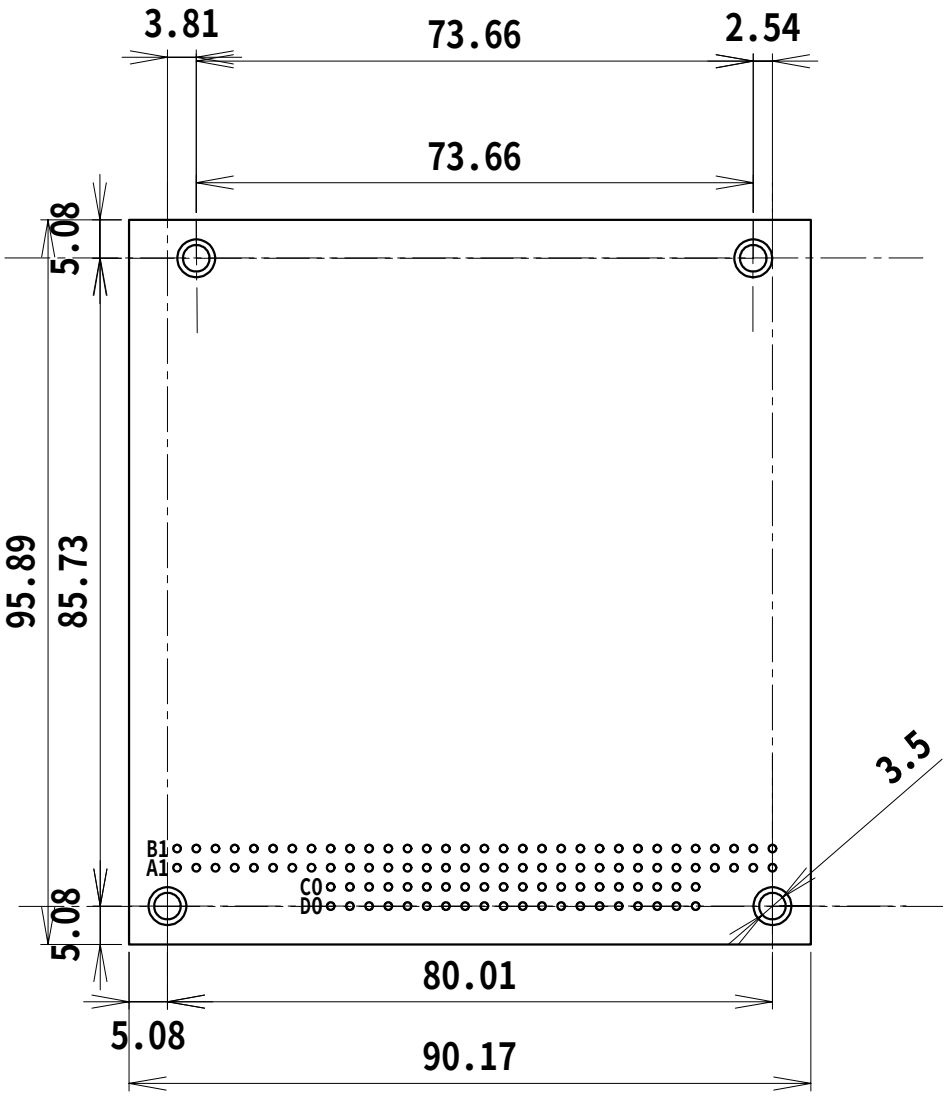
3.81
73.66
2.54
73.66
5.08
95.89
85.73
3.5
B1
A1
C0
D0
5.08
80.01
5.08
90.17